TM válvulas

TM63 LED

TM68

TM69

TM69 LED

Válvulas TM63 / TM63 LED / TM68 / TM69 / TM69 LED

MANUAL DE USUARIO

USER'S MANUAL INDEX

ENGLISH

ENGLISH

01. PRESENTATION

Congratulations for having purchased the water softener valve.

Read and follow all steps and guides carefully before installing and using your water softener system.

Before use, check the box and the valve to ensure that it has not suffered any damage during transport.

Any claim for handling damage must be submitted, along with the name of the carrier (such must also be communicated to the carrier), within 24 hours maximum, after having received the goods.

For efficient softener, requires periodical maintenance.

When you are away from your house for any period of time, you must shut off the water from the device.

The softener system operates with pressures between 2 Bar and 6 Bar. For higher pressures, a pressure reducing valve must be installed in the water inlet leading to the softener.

IT'S VERY IMPORTANT TO KEEP THIS MANUAL.

INTRODUCTION

ENGLISH

What it a water softener?

A water softener is a system that removes the scale from the water. Unlike reverse osmosis does not remove the salts, bacteria, viruses and other elements that can hold water, ie only removes scale.

Here are some of the advantages of having a home water softener installed:

- Saving electricity and less water consumption.
- Lower consumption of chemicals, cleaning, hygiene, etc...
- Protection of Plumbing, heating equipment and hot water generators.
- Protection of appliances (washing machines, dishwashers, etc..)
- Protection of the skin and hair.
- Protection of fittings, screens, etc..

How as the lime is removed by the water softener?

The softeners remove scale from water by ion exchange.

Low consumption softeners softeners are differentiated by standard components used in their construction, so that they need less time for regeneration and as a result, consumption of salt and water used for the regeneration of the resins are less monospherics.

Operating System:

The water softener process consists of two cycles: service and regeneration.

SERVICE: Water proviniente network, going by the resins containing the softener, it leaves attached to them, among other minerals, lime and magnesium it contains. The water freed of these minerals and passes the consumer circuit.

FEEDBACK: This cycle occurs when brine or regenerant passed through the resin bed, producing an exchange of calcium and magnesium ions by sodium. This process will be more or less efficient in function of the regeneration chosen.

For our low-power equipment, the type of feedback is "upstream", so that fluid flow during the regeneration cycle is produced from the resins bajad and "the less saturated", towards the upper thereof, so that the period of exchange of calcium and magnesium ions for sodium ions, is carried out more efficiently and quickly.

Models softeners:

CHRONOMETRIC: In chronometric softeners, feedbacks are regulated by time, eg every 5 days. Thus we know that each regeneration inevitably occur every five days, irrespective of the water that have consumed.

Therefore, we can be regenerated without having consumed any water or perhaps if consumption was very high, the resins are overloaded and do not eliminate the lime that can hold water, ie water we are consuming whole lime contains before passing through the softener.

These devices generally operate by cams and are programmed with a clock.

VOLUMETRIC DELAYED: This softener is volumetric, electronic and digital. The water reclamation system of this equipment is covered by the volume of water passing through the softener and whose information we have obtained previously to analyze the content of lime containing water to descale, so if for example we programmed it to regenerate when passing the 6,000 liters of water equipment, effectively only regenerate when water consumption was of this volume, not before.

As a team with a system with the possibility of delayed regeneration, this will be effective when it is programmed, after driving the volume of water.

ENGLISH

RECOMMENDATIONS

Carefully follow the manual of this system.

MANDATORY: The site chosen for the installation must have:
- Red Water: Check that the pressure is at least 2.5 bar and maximum 6 bar.
- Mains: 220V - 50 Hz.
- Drain.

Before installation you must verify that the softener contains all components and they have not been damaged during transport. In case you notice any damage or injury attributable to transportation must make a timely claim to the carrier within 24 hours after receiving the equipment.

Your softener should be installed with a network pressure between 2.5 Bar and 6 Bar for higher pressures must install a pressure reducing valve before the entry of water sediment filter (not included) located before the softener.

Do not use hot water with the softener.

This equipment must guard against frost, rain, damp and direct sunlight. The drain where it has to connect the softener must be below the overflow level.

The softener needs periodic maintenance. Call your installer or authorized service center.

02. TECHNICAL SHEET

- Control 4 regeneration cycles.
- LED display technology, with 4 digits and pictograms computer.
- Dual ceramic disk for service and regeneration.
- Interlock Function: System Interconnect with Bottles MULTIPLEX installation in parallel.
- Automatic valve top mount.
- Types volumetric regeneration / clockwork CONTRACORRIENTE electronically controlled.
- Valve suitable for filtration.
- Delayed regeneration (programmable), immediate or reinforced by front panel key.
- Programming m3 capacity and inlet water hardness (mmol / L)
- Auxiliary input for remote start regeneration (PLC, button, etc ...)
- Auxiliary output to control external element (pump, valve, RO, etc ...)
- Battery maintenance schedule (up to 3 days).
- By-Pass option during regeneration.

FAST PROGRAMMING

Between pages 11 - 24 you will find the valve programming process. Here are the programming times to enter according to the resin liters of your equipment:

RESIN LITERS	7 L	14 L	22 L	30 L	35 L	50 L	75 L	100 L	125 L
First cycle (PROGRAM 2)	3’ 00”	3’ 00”	3’ 00”	3’ 00”	3’ 00”	10’ 00”	10’ 00”	10’ 00”	12’ 00”
Second cycle (PROGRAM 3)	25’ 00”	30’ 00”	30’ 00”	45’ 00”	45’ 00”	56’ 00”	53’ 00”	53’ 00”	64’ 00”
Third cycle (PROGRAM 4)	1’ 00”	2’ 00”	3’ 00”	4’ 00”	4’ 00”	5’ 00”	7’ 00”	10’ 00”	13’ 00”
Fourth cycle (PROGRAM 5)	3’ 00”	3’ 00”	3’ 00”	3’ 00”	3’ 00”	15’ 00”	14’ 00”	14’ 00”	17’ 00”

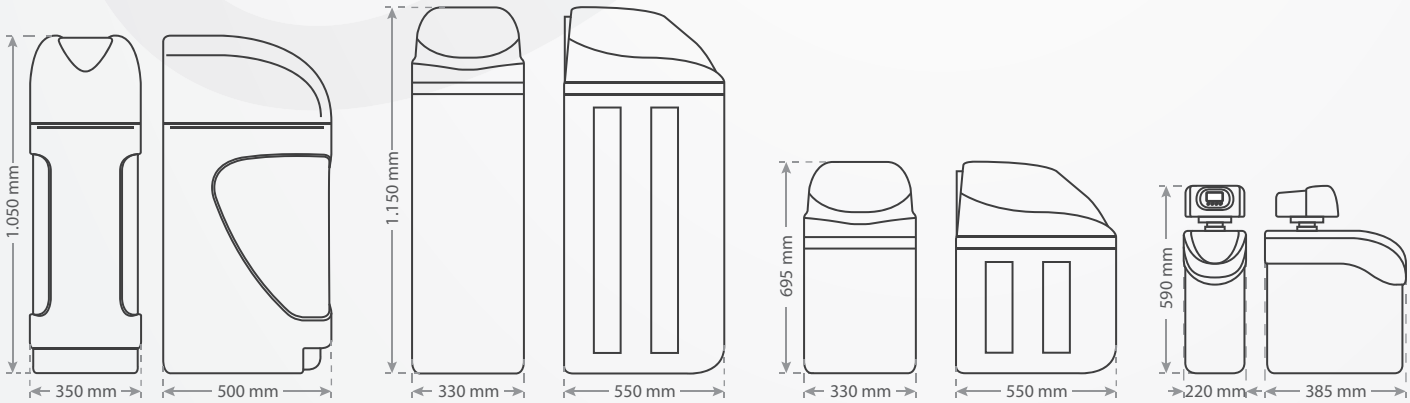

Modelos disponibles con ésta válvula.

Valve model:	TM69 / TM69 LED · ¾”	TM68 · 1”
Conection inlet / outlet:	¾” M	1” M
Conection of drain:	1/2” M	1/2” M
Brine injector system:	1/4 Tubo	1/4 Tubo
Diameter distribution pipe:	1”	1”
Maximum flow valve:	2,5 m^3/h	4,5 m^3/h
Range measurement of water volume:	0 - 99,99 m^3	0 - 99,99 m^3
Resin tank diameter:	7” - 13”	7” - 13”
Working pressure supported:	2 - 6 Bar	2 - 6 Bar
Temperature:	5 ºC - 40 ºC	5 ºC - 40 ºC

TM68 valve

ENGLISH

03. TM68/TM69/TM69 LED INSTALLATION DIAGRAM

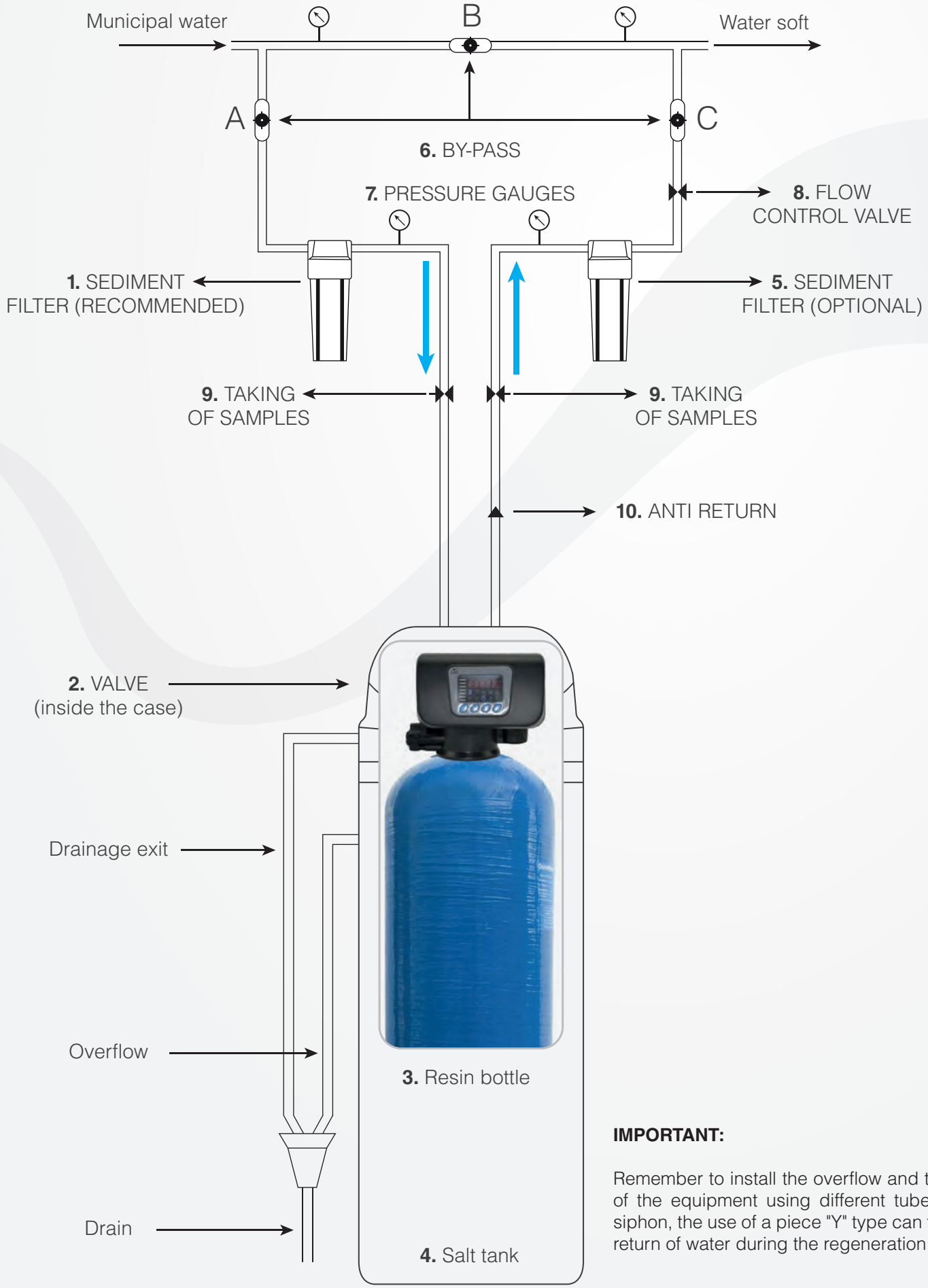

IMPORTANT:

Remember to install the overflow and the drain of the equipment using different tubes to the siphon, the use of a piece "Y" type can favor the return of water during the regeneration.

Fig. 1

ENGLISH

ENGLISH

04. COMPONENTS OF THE SOFTENING EQUIPMENT

Softening equipment is made up of the following elements (see installation scheme in fig. 1):

1. Sediment Filter (optional): This element containing a water filtering cartridge, which has the purpose of retaining particles larger than 20 microns in suspension.

2. Valve: This element contains mechanisms to perform the automatic regeneration of resins, through a programming system, either by time or by volume of water consumed.

3. Resin Bottle: This recipient containing ionic-exchange resins, which are those which perform the softening process.

4. Salt Tank: This recipient is the accumulates salt. It's capacity allows significant autonomy in salt replenishment, which is where the brine necessary to the softening process is produced.

5. Sediment filter (optional): To retain possible resin leakage.

6. By-Pass: Three-key system which allows isolation of the softening equipment's general pipe, in case of a malfunction or equipment maintenance. The function of the by-pass is to prevent the passage of water through the softening equipment. This, it's not necessary to cut off general network water flow when performing a filter change or repair.

Fig. 2: By-pass - Plumbing

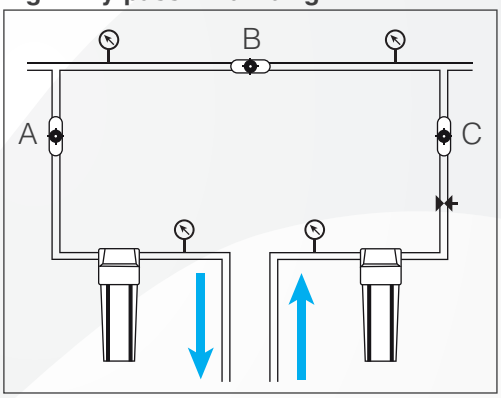

Key B closed and keys A and C open: This is the position necessary for the water to go through the softening equipment from the general network, so that softened water may be obtained.

Key B open and keys A and C closed: In this position, water does not go through the softening equipment; however, in case of repair or maintenance, water will be available within the remainder of the installation.

ESPAÑOL

ENGLISH

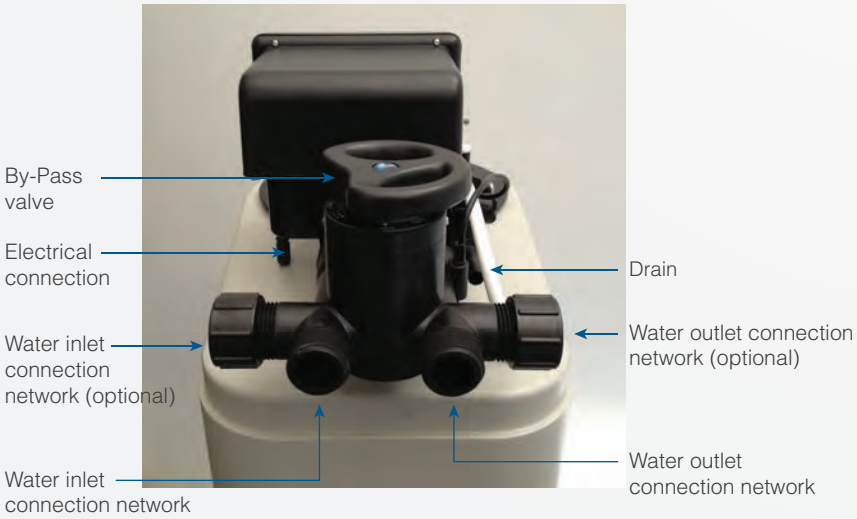

By-pass TM68

By-pass TM69

05. MAINTENANCE

PRACTICAL TIPS:

VERY IMPORTANT: Periodically check the clock water softening coincides with the official time of the country.

Periodically check the level of salt in the tank.

USE ONLY SALT IN PILLS, ESPECIALLY FOR DESCALERS (VACUUM).

- Periodically clean or replace the sediment filter.
- To change the sediment filter and the silico-phosphate filter, follow these steps:
    - Close the main switch of the installation site.
    - Open a faucet to depressurize the installation.
    - Set the Bypass control to "CLOSE" (closed).
    - Remove the sediment filter from the container and replace it with a new one.

The sediment filter must be replaced when it becomes dark brown. This will depend on the quality and turbidity of the water. Proceed in the same way if you also need to replace the silico-phosphate filter. The silicoo-phosphate filter must be replaced when the level of the balls has significantly decreased or disappeared.

- Reseat the equipment and the container vessels with the filter elements to their initial state.
- Open the main switch of the installation.

ENGLISH

06. WATER SOFTENER INSTALLATION

Installation of this dishwasher is to be performed by authorized service and following the instructions that the country's legislation.

Then follow the steps below for proper installation:

1. Check the water pressure of the network: it must be at least 2.5 bar and maximum 6 bar. Remember that water temperature must be between 5 ° C and 40 ° C.
2. Before the installation, close the water tap usually the same place you are going to install and open a faucet to depressurize it.
3. Choose an installation location near an electrical outlet of 220V - 50Hz
4. Check the correct status of the tubes.
5. Remove the cap covering the valve and then the lid of your softener. Remove the by-pass valve and the transformer:

ENGLISH

6. Connect the inlet and outlet to the "By-Pass".

1. Input connection
2. Outlet connection
3. Drain connection

1. Input connection
2. Outlet connection

7. Follow these steps to put the by-pass valve:

Remove the clips on the threads.

Remove the threads Input / Output.

Place the boards both threads.

Place the threads in the valve.

Insert the By-pass in the valve.

Re-placing the clamps

8. Check the volumetric counter sensor is connected properly.

9. Connect the valve to the transformer, and the transformer to the power supply cord:

10. Turn the valve by-pass by-pass position:

11. Connect the softener drain outlet to drain the network where you are performing the installation. Never install the drain line directly into a grid, sewer or sump. Always allow an air gap between the drain line and the wastewater to prevent it from being returned to the softener.

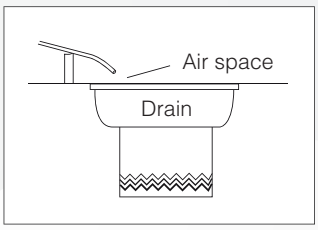

12. Also place a tube from the overflow outlet to drain (drain line), to avoid possible flooding in the event of incorrect programming, or a water leak by improper assembly, or a valve failure. The level should be po drain below the outlet to the overflow.

ENGLISH

IMPORTANT: Do not connect the overflow outlet to the drain outlet of the valve. Could cause accidental filling of the brine tank and cause flooding. So, install two separate tubes.

ENGLISH

13. Fill The salt water until half of it. Then pour a bag of salt approximately 25 Kg The salt (use only salt tablets for water softeners special).

When filling the tank of salt, be careful not to rub salt e nel protection tube cane brine.

14. Open the tap water and place the valve by-pass in service position. Open a cold water tap nearby and let the water run until air is removed from the softener.

Made depressurization, check the tightness of all connections. Let the water run for a few minutes to remove any residues in the pipes.

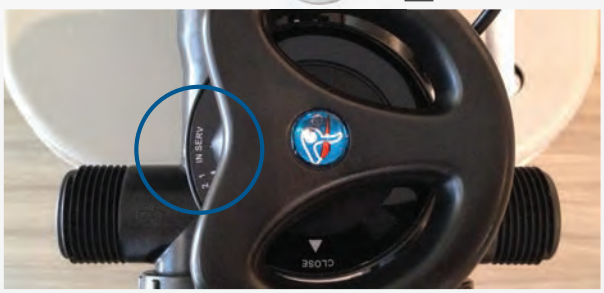

07. SPARE PARTS VALVE

Main features:

- Electronic programmer with graphic display, LED technology.
- Retention of data in non-volatile memory.
- Electromagnetic positioning assistance.
- Automatic keypad lock.

Technical data:

- Inlet / outlet / drain connections: 1 "or ¾" (depending on model).
- Bottle connection: 2 "- ½".
- Central distributor tube: 1 ".
- Dimensions: According to the model of the descaler.

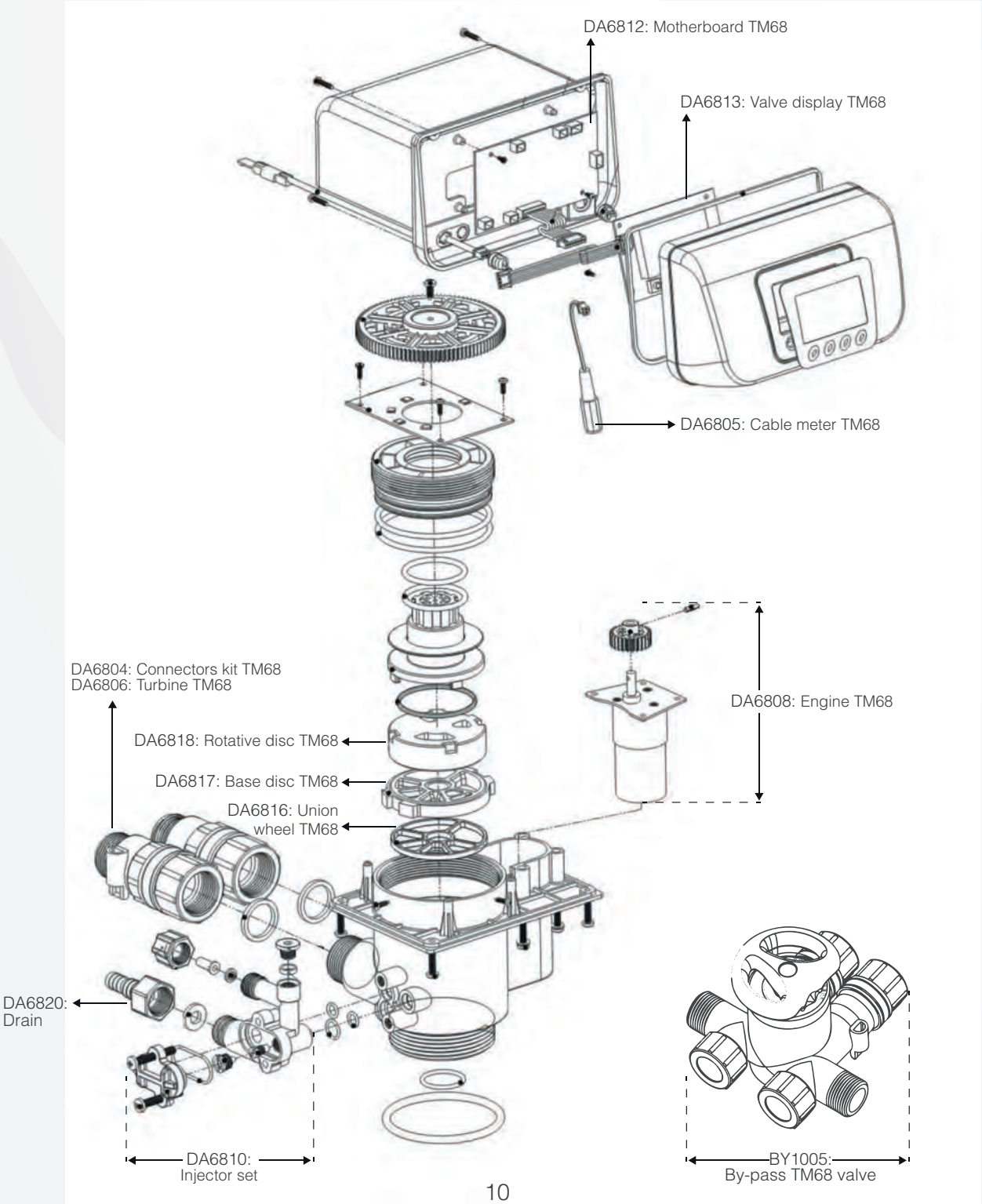

ENGLISH

08. TM63 / TM68 / TM69 WATER SOFTENER START-UP

Steps for correct programming:

1. Program indicator
2. Minutes indicator
3. Seconds indicator
4. Days / gallons
5. Hours / m^3
6. Minutes / liters
7. Service
8. Backwash
9. Aspiration brine
10. Load brine
11. Fast rinse
12. Schedule
13. Block
14. Programming mode
15. Menu / confirmation
16. Manual regeneration
17. Down
18. Up

ENGLISH

All valves are shipped with a standard configuration.
However, you can adjust this schedule according to the needs and water quality of the area.

TM68 / TM69 valve programmation:

1. Unlock and access to programmation:

To unlock and enter the manual mode and program changes, press the UP and DOWN buttons simultaneously until the key icon desappears and appears the tool icon (setting mode).


Button “UP”


Button “DOWN”

2. Set the clock valve:

Press the button “Menu/confirm” twice, and use the buttons UP and DOWN to set the clock at the hour. Press again the button “Menu/confirm” and you’ll be able to change the minutes. Finally, press “Menu/confirm” and the time will be set.

ENGLISH

Button “MENU”

Button “UP”

Button “DOWN”

Button “MENU”

3. Set the type of regeneration:

Press the button DOWN to set the type of regeneration:

- A-01 = Delayed downflow volumetric regeneration
- A-02 = Regeneration instant volumetric downflow
- A-03 = Delayed regeneration downflow volumetric intelligent (not to use)
- A-04 = Instant regeneration downflow intelligent volumetric (not use)

To change it press the UP key, and confirm with the "menu / confirmation" key:

A-01 = delayed regeneration (regeneration will always be done at a preset time, once the volume of water is exhausted).

A-02 = instantaneous regeneration (regeneration will be done upon reaching the predetermined water volume, regardless of the time of day).

A-03 = intelligent delayed regeneration (regeneration will always be done at a preset time, once the volume of water is exhausted), calculating the volume of water from the inlet hardness in mmol / Lt. (Result of dividing ºF / 10).

A-04 = intelligent instant regeneration (the regeneration will always be done to the depletion of the resin, once the volume of water is consumed), calculating the volume of water from the inlet hardness in mmol / Lt. (Result of dividing ºF / 10).

ENGLISH

A-01

A-02

A-03

A-04

4. Configuration of units of measurement:

Let's define the units of measure of the valve. To do this, press the button "DOWN" and we will see the units of measurement:

- **HU-01** = m^3 (we recommend using this parameter)
- **HU-02** = Gallons
- **HU-03** = Liters

Select the desired option using the UP and DOWN keys and press the "MENU" key to confirm.


Button “MENU”


Button “UP”


Button “DOWN”


Button “MENU”

5. Setting the regeneration time:

This option is only editable if you have chosen a type of regeneration delayed in point 3 (A-01, A-03). Press the DOWN key again to display the regeneration time.

Modify the time by pressing the "menu / confirmation" key, and then adjust it with the UP and DOWN keys. Normally it will be left at 2:00 in the morning, which is the time at which it is preset. Press "menu / confirmation" to confirm.


Button “MENU”


Button “UP”


Button “DOWN”


Button “MENU”

ENGLISH

6. Set the water volume to be treated:

Press the button DOWN. The screen will show the program 1, wich corresponds to the backwash interval, that is, the number of regenerations in which the valve does not make a backwash. For up flow valves is not necessary to perform a backwash in each regeneration. To adjust, press “Menu/confirm” and change the value with UP and DOWN until the desired value. Press “Menu/confirm” to confirm.


Button “MENU”

7. Volume-to-treat settings:

Configuration for volume of water to be treated in m^3, (options A-01, A-02, section 3). We will mark the volume that can be decalcified, according to table 1.

Press the DOWN key. The display will show the amount of water in m3 that will pass through the resin after the regeneration process. Press the "menu / confirmation" key again and the value will start blinking. You can change this amount using the UP and DOWN buttons. Press "menu / confirmation" to confirm and move to decimal setting. Modify the quantity with the "UP" / "DOWN" buttons.

Button “MENU”

Button “UP”

Button “DOWN”

Button “MENU”

Press "menu / confirmation" again to confirm the setting. Set the appropriate amount according to the amount (liters) of resin and the hardness of the water. Refer to the corresponding value in Table 1.

Where:
A: resine amount (liters)
B: French degrees hardness (ºF)

HARDNESS	Fº	10º	15º	20º	25º	30º	40º	50º	60º	70º	80º	90º	100º
7 L	L.	3.150	2.100	1.575	1.260	1.050	788	633	525	450	394	350	315
	Gal.	832	554	416	333	277	208	166	139	119	104	92	83
	m³	3,15	2,10	1,58	1,26	1,05	0,79	0,63	0,53	0,45	0,39	0,35	0,32
14 L	L.	6.300	4.200	3.150	2.520	2.100	1.575	1.260	1.050	900	788	700	630
	Gal.	1.663	1.109	832	665	554	416	333	277	238	208	185	166
	m³	6,30	4,20	3,15	2,52	2,10	1,58	1,26	1,05	0,90	0,79	0,70	0,63
22 L	L.	9.900	6.600	4.950	3.960	3.300	2.475	1.980	1.650	1.414	1.238	1.100	990
	Gal.	2.614	1.742	1.307	1.045	871	653	523	436	373	327	290	261
	m³	9,90	6,60	4,95	3,96	3,30	2,48	1,98	1,65	1,41	1,24	1,10	0,99
30 L	L.	13.500	9.000	6.750	5.400	4.500	3.375	2.700	2.250	1.929	1.688	1.500	1.350
	Gal.	3.564	2.376	1.782	1.426	1.188	891	713	594	509	445	396	356
	m³	13,50	9,00	6,75	5,40	4,50	3,38	2,70	2,25	1,93	1,69	1,50	1,35
35 L	L.	15.750	10.500	7.875	6.300	5.250	3.938	3.150	2.625	2.250	1.969	1.750	1.575
	Gal.	4.158	2.772	2.079	1.663	1.386	1.039	832	693	594	520	462	416
	m³	15,75	10,50	7,88	6,30	5,25	3,94	3,15	2,63	2,25	1,97	1,75	1,58

Table 1. Volume of treated water (m³) between regenerations according to water hardness and amount of resin.

Regeneration: adjustment of cycle times:

The times of the regeneration cycles have been pre-programmed by the manufacturer of the descaler. However, you can change them in advanced programming mode as follows.

8. Regulation of the first cycle (backwash):

From the previous state, press the "DOWN" key again until program 2 is displayed, which is the duration of the counterwash (in minutes). Press the "menu / confirmation" key for the setting of the first cycle.

ENGLISH

With the help of the UP and DOWN keys, indicate the duration of the back-up of your water softener (Table 2 shows the corresponding value for each model). Press "menu / confirmation" to confirm.

9. Second cycle regulation (aspiration of brine):

Press the "DOWN" key for the second cycle setting. The indicator light will mark program 3, which corresponds to the minutes of brine suction. Press the "menu / confirmation" key for the setting of the second cycle.

With the help of the UP and DOWN keys, indicate the brine suction time of your water softener (table 2). Press "menu / confirmation" to confirm.

10. Regulation of the third cycle (brine load):

Press the DOWN key for the third cycle setting. The indicator light will mark program 4, which corresponds to the brine charge time (in minutes).

Using the "menu / confirmation" key, and with the help of the UP and DOWN keys, mark the brine charge time of your water softener (table 2). Press "menu / confirmation" to confirm.

11. Fourth cycle adjustment (Quick wash):

Press the DOWN key to set the fourth cycle. The indicator light will show program 5, which corresponds to the Quick Wash minutes. Use the "menu / confirmation" key and use the UP and DOWN keys to set the fast wash time (table 2). Press "Menu / Confirmation" to confirm.

ENGLISH

Regeneration times according to liters of resin in the bottle						
Liters of resin	First cycle: backwash	Second cycle: aspiration of brine	Third cycle: brine load	Fourth cycle: Quick wash	Bottle	Injector according to bottle Ø
	Program 2	Program 3	Program 4	Program 5		
14	3 min.	30 min.	2 min.	3 min.	10x17	White
22	3 min.	30 min.	3 min.	3 min.	08x35	Yellow
30	3 min.	45 min.	4 min.	3 min.	10x35	White
35	3 min.	45 min.	4 min.	3 min.	10x35	White

Table 2. Regeneration time for each cycle (using standard resine as reference) at 3 bars entry pressure.

ENGLISH

12. Maximum days between regenerations H- :

Press the button DOWN, the screen will show H- (maximum days between regenerations).

These are number of days that if there is no water consumption after the days we have scheduled, there will be a maintenance regeneration.

Press “Menu/confirm” and use UP and DOWN to set the number of days you wish, between 00 and 40. That is preset at 30 days. Press “Menu/confirm” to confirm.


Button “MENU”


Button “UP”


Button “DOWN”


Button “MENU”

13. External signal mode:

Finally, pressing DOWN, the screen will show b-01 (external signal mode).

This option has two choice:

b-01: For connect an additional pump or electrovalve. Useful in installations with insufficient pressure or with external by-pass management (it requires additionals components).

b-02: For connect an additional electrovalve to despresurize during the placement of the ceramics discs. Useful in big equipments and high pressures. It requires additionals components.

Press “Menu/confirm” and use UP and DOWN to set the option desired. It’s preset in b-01.
Press “Menu/confirm” to confirm.

The process is finished, you must only press DOWN and the current time will be shown.

Button “MENU”

ENGLISH

ENGLISH

09. TM63 LED / TM69 LED WATER SOFTENER START-UP

Pasos para una correcta programación:

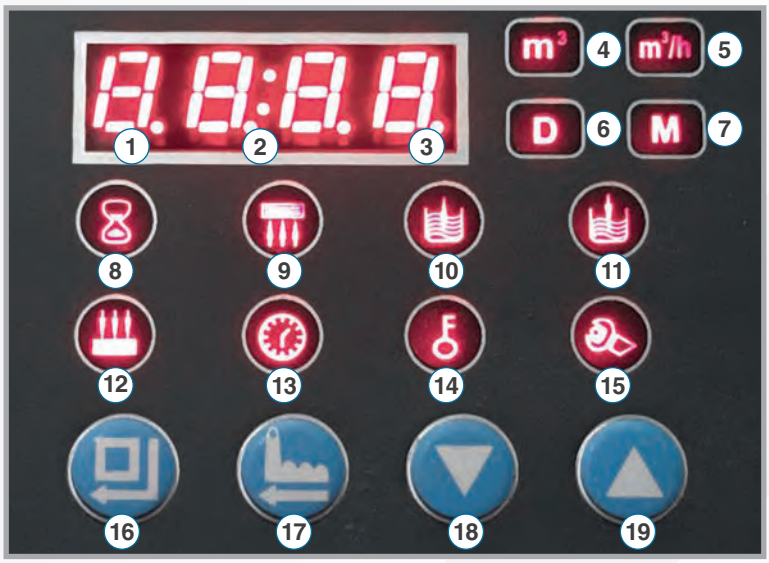

1. Program indicator
2. Minutes indicator
3. Seconds indicator
4. Days / gallons
5. Hours / m³
6. Minutes / liters
7. Service
8. Backwash
9. Aspiration brine
10. Load brine
11. Fast rinse
12. Schedule
13. Block
14. Programming mode
15. Menu / confirmation
16. Manual regeneration
17. Down
18. Up

ENGLISH

ENGLISH

All valves are shipped with a standard configuration. However, you can adjust this schedule according to the needs and water quality of the area.

TM69 LED valve programmation:

1. Unlock and access to programmation:

To unlock and enter the manual mode and program changes, press the UP and DOWN buttons simultaneously until the key icon desappears and appears the tool icon (setting mode).


Button “UP”


Button “DOWN”

2. Set the clock valve:

Press the button “Menu/confirm” twice, and use the buttons UP and DOWN to set the clock at the hour. Press again the button “Menu/confirm” and you’ll be able to change the minutes. Finally, press “Menu/confirm” and the time will be set.


Button “MENU”


Button “UP”


Button “DOWN”


Button “MENU”

3. Set the type of regeneration:

Press the button DOWN to set the type of regeneration:

· A-01 = Delayed downflow volumetric regeneration
· A-02 = Regeneration instant volumetric downflow

To change it press the UP key, and confirm with the "menu / confirmation" key:

A-01 = delayed regeneration (regeneration will always be done at a preset time, once the volume of water is exhausted).

A-02 = instantaneous regeneration (regeneration will be done upon reaching the predetermined water volume, regardless of the time of day).


A-01


A-02

4. Setting the regeneration time:

This option is only editable if you have chosen a type of regeneration delayed in point 3 (A-01, A-03). Press the DOWN key again to display the regeneration time.

Modify the time by pressing the "menu / confirmation" key, and then adjust it with the UP and DOWN keys. Normally it will be left at 2:00 in the morning, which is the time at which it is preset. Press "menu / confirmation" to confirm.


Button “MENU”


Button “UP”


Button “DOWN”


Button “MENU”

5. Set the water volume to be treated:

Press the button DOWN. The screen will show the program 1, wich corresponds to the backwash interval, that is, the number of regenerations in which the valve does not make a backwash. For up flow valves is not necessary to perform a backwash in each regeneration. To adjust, press “Menu/confirm” and change the value with UP and DOWN until the desired value. Press “Menu/confirm” to confirm.

Button “MENU”

6. Volume-to-treat settings:

Configuration for volume of water to be treated in m³, (options A-01, A-02, section 3). We will mark the volume that can be decalcified, according to table 1.

Press the DOWN key. The display will show the amount of water in m3 that will pass through the resin after the regeneration process. Press the "menu / confirmation" key again and the value will start blinking. You can change this amount using the UP and DOWN buttons. Press "menu / confirmation" to confirm and move to decimal setting. Modify the quantity with the "UP" / "DOWN" buttons.

Button “MENU”

Button “UP”

Button “DOWN”

Button “MENU”

Press "menu / confirmation" again to confirm the setting. Set the appropriate amount according to the amount (liters) of resin and the hardness of the water. Refer to the corresponding value in Table 1.

ENGLISH

HARDNESS	F°	10°	15°	20°	25°	30°	40°	50°	60°	70°	80°	90°	100°
7 L	L.	3.150	2.100	1.575	1.260	1.050	788	633	525	450	394	350	315
	Gal.	832	554	416	333	277	208	166	139	119	104	92	83
	m³	3,15	2,10	1,58	1,26	1,05	0,79	0,63	0,53	0,45	0,39	0,35	0,32
14 L	L.	6.300	4.200	3.150	2.520	2.100	1.575	1.260	1.050	900	788	700	630
	Gal.	1.663	1.109	832	665	554	416	333	277	238	208	185	166
	m³	6,30	4,20	3,15	2,52	2,10	1,58	1,26	1,05	0,90	0,79	0,70	0,63
22 L	L.	9.900	6.600	4.950	3.960	3.300	2.475	1.980	1.650	1.414	1.238	1.100	990
	Gal.	2.614	1.742	1.307	1.045	871	653	523	436	373	327	290	261
	m³	9,90	6,60	4,95	3,96	3,30	2,48	1,98	1,65	1,41	1,24	1,10	0,99
30 L	L.	13.500	9.000	6.750	5.400	4.500	3.375	2.700	2.250	1.929	1.688	1.500	1.350
	Gal.	3.564	2.376	1.782	1.426	1.188	891	713	594	509	445	396	356
	m³	13,50	9,00	6,75	5,40	4,50	3,38	2,70	2,25	1,93	1,69	1,50	1,35
35 L	L.	15.750	10.500	7.875	6.300	5.250	3.938	3.150	2.625	2.250	1.969	1.750	1.575
	Gal.	4.158	2.772	2.079	1.663	1.386	1.039	832	693	594	520	462	416
	m³	15,75	10,50	7,88	6,30	5,25	3,94	3,15	2,63	2,25	1,97	1,75	1,58

Table 1. Volume of treated water (m³) between regenerations according to water hardness and amount of resin.

Regeneration: adjustment of cycle times:

The times of the regeneration cycles have been pre-programmed by the manufacturer of the descaler. However, you can change them in advanced programming mode as follows.

ENGLISH

7. Regulation of the first cycle (backwash):

From the previous state, press the "DOWN" key again until program 2 is displayed, which is the duration of the counterwash (in minutes). Press the "menu / confirmation" key for the setting of the first cycle.

With the help of the UP and DOWN keys, indicate the duration of the back-up of your water softener (Table 2 shows the corresponding value for each model). Press "menu / confirmation" to confirm.

8. Second cycle regulation (aspiration of brine):

Press the "DOWN" key for the second cycle setting. The indicator light will mark program 3, which corresponds to the minutes of brine suction. Press the "menu / confirmation" key for the setting of the second cycle.

ENGLISH

With the help of the UP and DOWN keys, indicate the brine suction time of your water softener (table 2). Press "menu / confirmation" to confirm.

9. Regulation of the third cycle (brine load):

Press the DOWN key for the third cycle setting. The indicator light will mark program 4, which corresponds to the brine charge time (in minutes).

Using the "menu / confirmation" key, and with the help of the UP and DOWN keys, mark the brine charge time of your water softener (table 2). Press "menu / confirmation" to confirm.

10. Fourth cycle adjustment (Quick wash):

Press the DOWN key to set the fourth cycle. The indicator light will show program 5, which corresponds to the Quick Wash minutes. Use the "menu / confirmation" key and use the UP and DOWN keys to set the fast wash time (table 2). Press "Menu / Confirmation" to confirm.

ENGLISH

Regeneration times according to liters of resin in the bottle						
Liters of resin	First cycle: backwash	Second cycle: aspiration of brine	Third cycle: brine load	Fourth cycle: Quick wash	Bottle	Injector according to bottle Ø
	Programa 2	Programa 3	Programa 4	Programa 5		
7	3 min.	25 min.	1 min.	3 min.	07x17	Pink
14	3 min.	30 min.	2 min.	3 min.	10x17	White
20	3 min.	30 min.	3 min.	3 min.	08x35	Yellow
22	3 min.	30 min.	3 min.	3 min.	08x35	Yellow
30	3 min.	45 min.	4 min.	3 min.	10x35	White
35	3 min.	45 min.	4 min.	3 min.	10x35	White

Table 2. Regeneration time for each cycle (using standard resine as reference) at 3 bars entry pressure.

11. Maximum days between regenerations H- :

Press the button DOWN, the screen will show H- (maximum days between regenerations).

These are number of days that if there is no water consumption after the days we have scheduled, there will be a maintenance regeneration.

Press “Menu/confirm” and use UP and DOWN to set the number of days you wish, between 00 and 40. That is preset at 30 days. Press “Menu/confirm” to confirm.


Button “MENU”


Button “UP”


Button “DOWN”


Button “MENU”

ENGLISH

ENGLISH

12. External signal mode:

Finally, pressing DOWN, the screen will show b-01 (external signal mode).

This option has two choice:

b-01: For connect an additional pump or electrovalve. Useful in installations with insufficient pressure or with external by-pass management (it requires additionals components).

b-02: For connect an additional electrovalve to despresurize during the placement of the ceramics discs. Useful in big equipments and high pressures. It requires additionals components.

Press “Menu/confirm” and use UP and DOWN to set the option desired. It’s preset in b-01.
Press “Menu/confirm” to confirm.

The process is finished, you must only press DOWN and the current time will be shown.

Button “MENU”

ENGLISH

10. MANUAL REGENERATION

To force a manual regeneration of the equipment, proceed as follows.

1. Unlock and access to programmation:

To unlock and enter the manual mode and program changes, press the UP and DOWN buttons simultaneously until the key icon desappears and appears the tool icon (setting mode).

Button “UP”

Button “DOWN”

2. Access manual regeneration:

Press the "manual / return" key twice to start manual regeneration. The valve will follow the programming cycles according to the programmed times until the end of the process (the cycles will vary depending on whether it is a decalcification valve).

If you want to advance the cycle manually, press "manual / return" again. The valve will automatically go to the next cycle.

Button
“MANUAL/RETURN”

When water comes out clear, again measure the water hardness to graduate after passing through the softener. It is recommended that the degree of hardness is between 5 ° F and 10 ° F. To adjust the ° F, do so by driving the By-Pass, fixing it into place:

- Position "SERVICE": The water will come directly from the softener.
- In case the hardness is below 5 ° F gradually opened the By-Pass (until the water meets the desired °F, do as many checks as required).

After completing this process, you will correctly set your softener. Remember that for a smooth operation of your water softener, you must have enough salt in the tank, otherwise it will hard water and lime.

In the event of a fault in the electrical power supply during a period of time greater than 8 hours, may have changed the scheduled time, thus, be necessary to reprogram the valve again, following the instructions given above.

If the power failure is less than 8 hours, the program should not suffer any inconvenience.

ENGLISH

11. DUPLEX OPERATION (INTERCONNECTION)

To use the valve in INTERLOCK (DUPLEX system) only the two valves must be connected with the corresponding cable for this purpose.

If the terminal of the BLOCK interlock cable on CN8 on the other valve is connected to one valve, the terminal BLACK will be connected to CN7.

It can be done in reverse, since each valve has both the CN7 and CN8 connector, but they must match the color of the terminal with that of the connector.

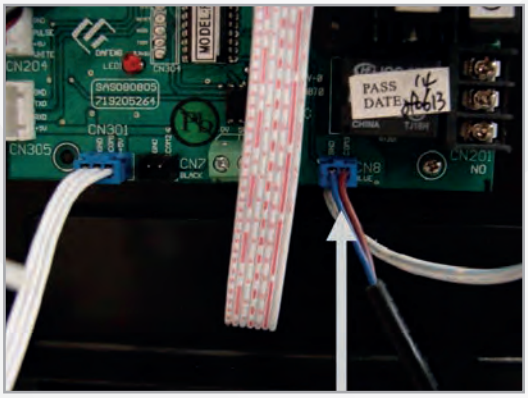

CN8

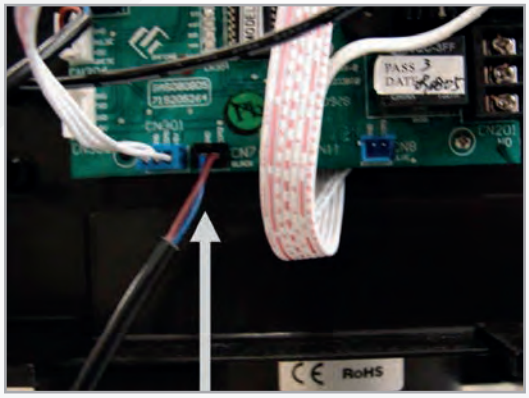

CN7

ENGLISH

ENGLISH

The following is a schematic diagram of a two-bottle installation in duplex mode:

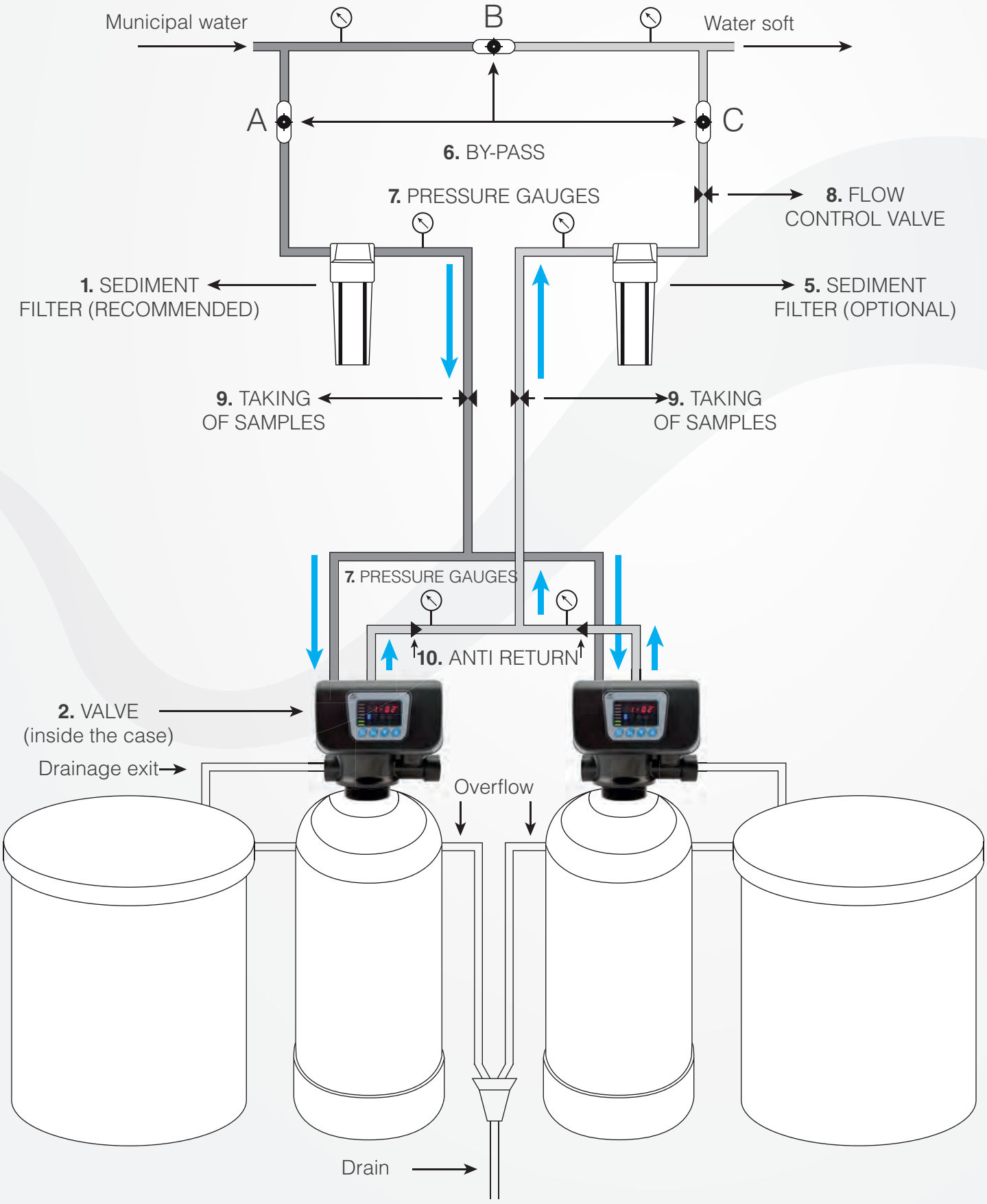

The teams work in parallel. If you want to work in alternation, the TM80 3-way valve must be installed.

ENGLISH

12. OPERATING REQUIREMENTS

1. Typs:

Regularly check the equipment's clock matches the real time. In case of softening, it is recommended wash and sanitize the resine once a month by products specially designed for softener maintenance.

Regularly check the softener performs a regeneration. Clean or replace the sediment filter (optional) periodically. Use only special salt tablets for water softeners UNE 973. You should periodically observe the tank, so that this will always remain with salt.

The recommended level of salt would be a little more than half of the tank.
Reset the program setting, after prolonged outages.

2. Clean or replace filter cartridges (not included. Sold separately):

1. Close the mains water.
2. Open a faucet to depressurize the network.
3. Close the by-pass in the filter.
4. Take out the vessel containing the cartridge.
5. If you have a filter cartridge wash it under a flow of water or replace it with a new one if required.

OPTIONAL: In case of siliphos cartridge replace it for a new one if the level of the balls is below the minimum safety level.

It is advisable to perform the cleaning operation every time the filter cartridge turns a brown color. It depends on the water in each area.

ENGLISH

13. TECHNICAL SERVICE

For the proper functioning of equipment should take into account these points periodically.

Perform periodically an analysis of mains and soft water.

Periodically clean and replace all gaskets and components in direct contact with water: filters, volumetric meter, valve discs.

Inspect the system for signs of leakage or damage. All operations must be written down on the service book.

Maintenance operations requiring removal of parts from the equipment, resulting in exposure to air parts, which are in contact with water should be conducted under strict and hygienic control in order to avoid system contamination. Staff should wear gloves and disinfect tools before use. Replaced parts shall be properly disposed of and replacement parts must remain sealed in their containers until the last minute.

14. TROUBLESHOOTING

PROBLEM	ORIGIN	SOLUTION
1. The softener does not perform regeneration.	Failure in the electric connection.	Check the electrical installation.
	Faulty programmer.	Replace the programmer. Contact TS.
	Temporal power supply cut.	Reprogram the current time.
	Water meter does not work.	Check By-pass valve in service position. Contact TS.
2. Hard water.	Mixer or by-pass valve open.	Turn by-pass valve to the SERVICE position adjusting the mixing to level 1 or 2.
	Lack of salt in the tank.	Add salt and maintain its level over the water.
	Incorrect programming of regeneration cycles.	Reprogram following instructions. Contact TS.
	Water meter does not work.	Check meter. Contact TS.
	Excessive service flow.	Adequate maximum flow to the value indicated by the installer.
	Excessive water consumption between regenerations.	Reprogram water volume between regenerations. Check there are no water leaks in the installation.
	Lack of water in the salt tank.	Pressure or time insufficient. Adjust according to the instructions. Contact TS.
	Power supply cut.	Verify electrical installation. Program time and do a manual regeneration.
	Blocked tube to drain.	Clear drainage tube.
	Internal leak on valve or distributor.	Clean/change filter or injector. Change valve main body Contact TS.
3. High consumption of salt.	Incorrect adjustment of the salt dose.	Pressure or tank refill time are too high. Adjust according to instructions. Contact TS.
	Excessive amount of water in the salt deposit.	See anomaly 8.
4. Drop of resins through the drain or service outlet.	Service flow too high.	Adequate maximum flow to the value indicated by the installer.
	Inlet filter saturated.	Replace or change filter.
	Resin bed of the softener is dirty.	Increase backwash time. If not solved, contact TS to clean resin bed.
	Resin damage due to chlorine excess.	Contact installer or TS.
	Inlet and outlet conductions are dirty.	Contact installer or TS.
5. Loss of resins through the drain or service outlet.	Crepines or distribution tube damaged or misadjusted.	Contact with TS. Note: During the first liters water has a yellow color due to small fragments of resin.
	Resin damaged due to chlorine excess.	

ENGLISH

ENGLISH

14. TROUBLESHOOTING

PROBLEM	ORIGIN	SOLUTION
6. Chlorides in outlet water (salty taste).	Inadequate regeneration.	Increase the quick wash duration.
	Resin dirty.	Sanitize tank. Contact with TS.
7. Iron in the outgoing water.	Resin dirty.	Check regeneration cycles. Increase the quick wash duration. Sanitize. Contact with TS.
8. Excess water or overflow in the salt deposit.	Excessive refill time.	Correct refill time. Contact with TS.
	Excessive inlet pressure.	Reduce pressure to 4 bar. Contact installer or TS.
	Insufficient brine suction.	See point 9.
	Obstruction of the salt valve.	Contact with TS.
	Inadequate injector.	Contact with TS.
	Blocked programmer.	Contact with TS.
9. The softener does not suction the brine	Inlet water pressure insufficient.	Increase pressure to 2 bar minimum.
	Air in the brine suction line.	Tighter connections in the suction line and verify seal. Contact with TS.
	Exit to drain blocked.	Check and/or clear drain outlet.
	Aspiration valve / probe blocked.	Clean probe/valve. Contact with TS.
	Injector blocked.	Contact with TS.
10. Continuous regeneration.	The programmer does not function correctly.	Change the programmer. Contact with TS.
11. Continuous drainage of water into the drain or salt tank.	Internal leak on valve.	Replace valve main body.
	Power supply cut during backwash or quick wash	Set the by-pass in position closed until power supply is back.
	Dirtiness inside valve.	Contact with TS.
	Adjustment of the ceramic disc.	Contact with TS.
	Valve blocked.	Contact with TS.
12. Equipment doesn't perform a bed filter cleaning	Failure in the electric connection.	Check the electrical installation.
	Faulty programmer.	Replace the programmer. Contact with TS.
	Temporal power suppy cut.	Reprogram the current time.
13. Water leakage in drain outlet.	There is air in the equipment.	Evacuar totalmente el aire del tanque.
	Too much flow on Backwash cycle.	Change the DLFC.
	Crepina superior dañada.	Replace the upper crepine.
14. Toothed gear turns constantly.	Failure of electronic board.	Replace electronic board and display.
	Internal wires desconected.	Check internal wires.
	Toothed gear damaged.	Repair toothed wheel.

ENGLISH

15. WARRANTY

Customer name and address:

Mr. / Mrs.: .....
Address: .....
ZIP code and Town: .....
Phone: ..... E-mail: .....

Deadler details:

Compnay name: .....
Address: .....
ZIP Code and Town: .....
Phone: ..... FAX: ..... E-mail: .....

The warranty period is **TWO YEARS** from the date of purchase, valid in Spain and the countries of the EEC. The warranty covers manufacturing defects and assumes "resposability of the dealer and consumer rights", in accordance with Article 4 of Law 23/2003 of July 10th of Guarantees of Consumption Goods Sale, and in addition it does not affect the consumer's right in accordance with the law.

The compnay is committed to guarantee parts that could have **a manufacturing defects**, provided that we have received the part from the customer for examination **in our company**.

To make a warranty claim, it is necessary that the defective parts comes with this warranty certificate duly completed and stamped by the dealer. The guarantee must always be given in our warehouses.
In all cases, our liability is limited to the **replacement or repair of defective materials**, not giving rise to compensation or other chargers.

Returns and equipment claims will not be accepted after a period of 15 days following the receipt.
In case of agreement during this period, the equipment must be delivered to us perfectly packaged, SENT PREPAID TO OUR WAREHOUSE.

THE WARRANTY DOES NOT APPLY UNDER THE FOLLOWING CONDITIONS:

1. Substitution, parts or components repair caused by wear, due to normal use of the device, such as resins, polyphosphates, sediment cartridges, etc..., as indicated in the instructions manual of the device.
2. Damage caused by improper use of the equipment and those caused by transportation.
3. Handling, alterations or repairs performed by third parties.
4. Failure or malfunctioning that would be the result of improper installation, outside technical service or if the installation instructions have not been followed correctly.
5. Inappropiate use of the device or if operating conditions are not those specified by the manufacturer.
6. Use of spare parts that are not original parts of the company.

«CE» DECLARATION OF CONFORMITY

We declare under our own responsability that the reverse osmosis system for water filtration for human consumption complies with the standards or normative documents **«EN-12100-1, EN-12100-2, EN-55014-1:2000/A1:2001, EN61000-3-2:2000/A1:2001, EN61000-3-3:1995/A1:2001, EN1558-2-6»** , and complies with essential requeriments of Directives: **98/37/CE, 73/23/CEE, 89/336/CEE.**

Dealer stamp

ENGLISH

ENGLISH

16. EQUIPMENT CONTROL AND MONITORING

PURPOSE OF THE NOTICE	DATE	TECHNICAL DATA
☐ Installation		Name:...
☐ Maintenance		Signature or seal:
☐ Warranty		
☐ Review		
☐ Repair		
☐ Installation		Name:...
☐ Maintenance		Signature or seal:
☐ Warranty		
☐ Review		
☐ Repair		
☐ Installation		Name:...
☐ Maintenance		Signature or seal:
☐ Warranty		
☐ Review		
☐ Repair		
☐ Installation		Name:...
☐ Maintenance		Signature or seal:
☐ Warranty		
☐ Review		
☐ Repair		
☐ Installation		Name:...
☐ Maintenance		Signature or seal:
☐ Warranty		
☐ Review		
☐ Repair		

OBSERVATIONS:...

....

....

osmofilter®

Tratamiento Integral del Agua